1R14-019

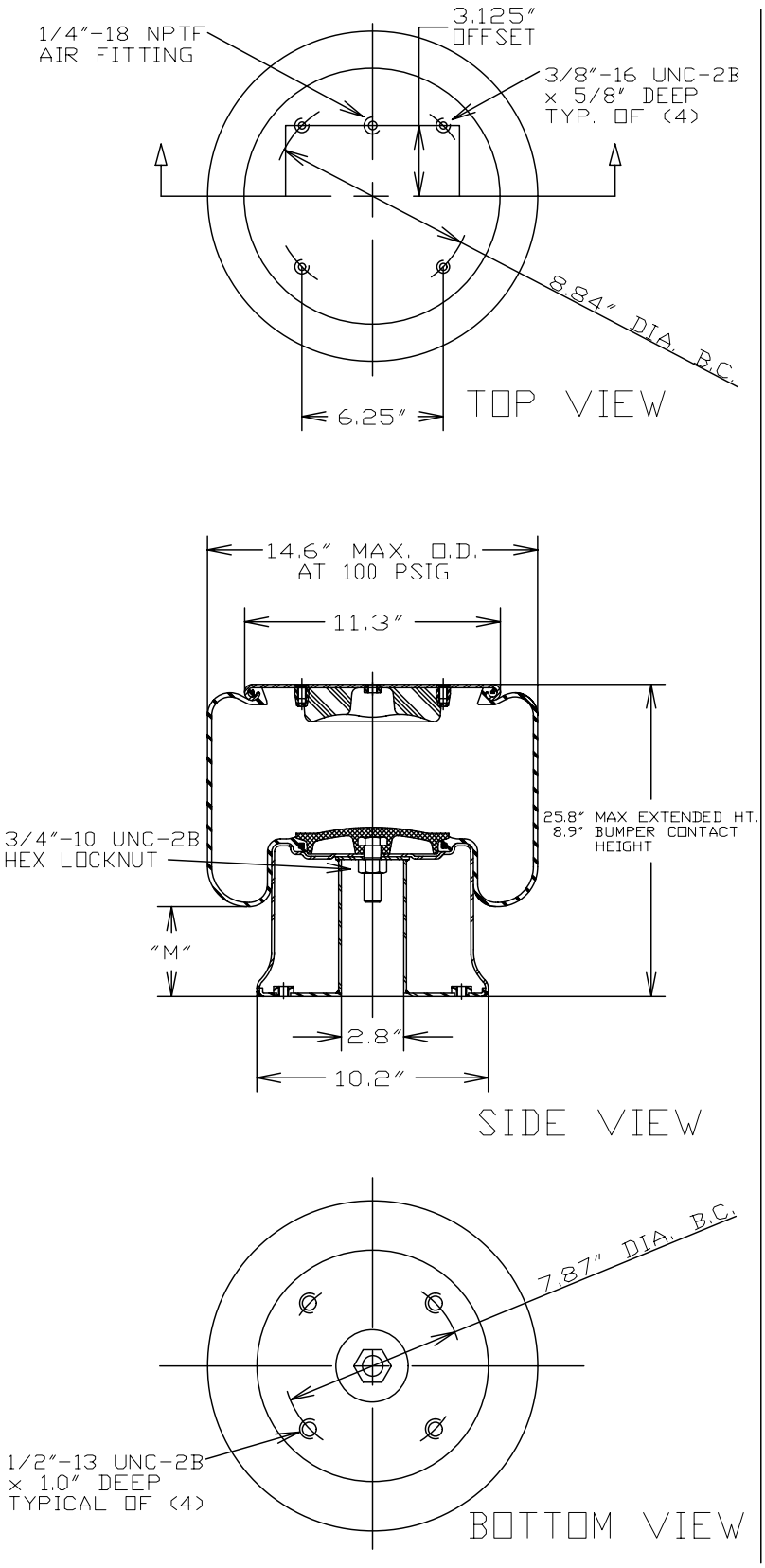

ASSEMBLY NUMBER	ELASTOMER	AIR FITTING	BUMPER INCLUDED
1R14-019	NAT.RUBBER	1/4"-18 NPTF OFFSET 3.125"	YES

SPRING FEATURES:

- LOAD RANGE (ISOLATOR).....1500-8500 lb
- DESIGN HEIGHT RANGE (ISOLATOR)....14.0-18.0 in
- USEABLE STROKE (ACTUATOR).....16.9 in
- ASSEMBLY WEIGHT.....29.0 lb
- TEMPERATURE RANGE*.....
- STEEL PISTON

* NOTE: PRODUCT LIFE MAY BE SHORTENED WHEN OPERATING AT OR NEAR EXTREME TEMPERATURES. SEE TEMPERATURE RANGE GUIDELINES SECTION.

OTHER OPTIONS:

- METRIC ATTACHMENTS

UPPER BEAD PLATE:

- ALTERNATE BOLT LENGTHS AND SPACINGS
- ALTERNATE AIR FITTING SIZES AND LOCATIONS
- NO BUMPER OR ALTERNATE BUMPER

PISTON:

- ALTERNATE HEIGHTS
- ALUMINUM PISTON

RECOMMENDED MAX. TORQUE VALUES

3/8"-16 UNC BLIND TAP TYP. OF (4)	1/2"-13 UNC BLIND TAP TYP. OF (4)	1/4"-18 UNC AIR FITTING	3/4"-10 UNC HEX LOCKNUT
300 in-lb 25 ft-lb	600 in-lb 50 ft-lb	240 in-lb 20 ft-lb	900 in-lb 75 ft-lb

NOTE: SEE GUIDELINES FOR PROPER APPLICATION OF THIS PRODUCT

GRAPHS FOR REFERENCE ONLY - USE THE CHART DATA BELOW FOR DESIGN WORK

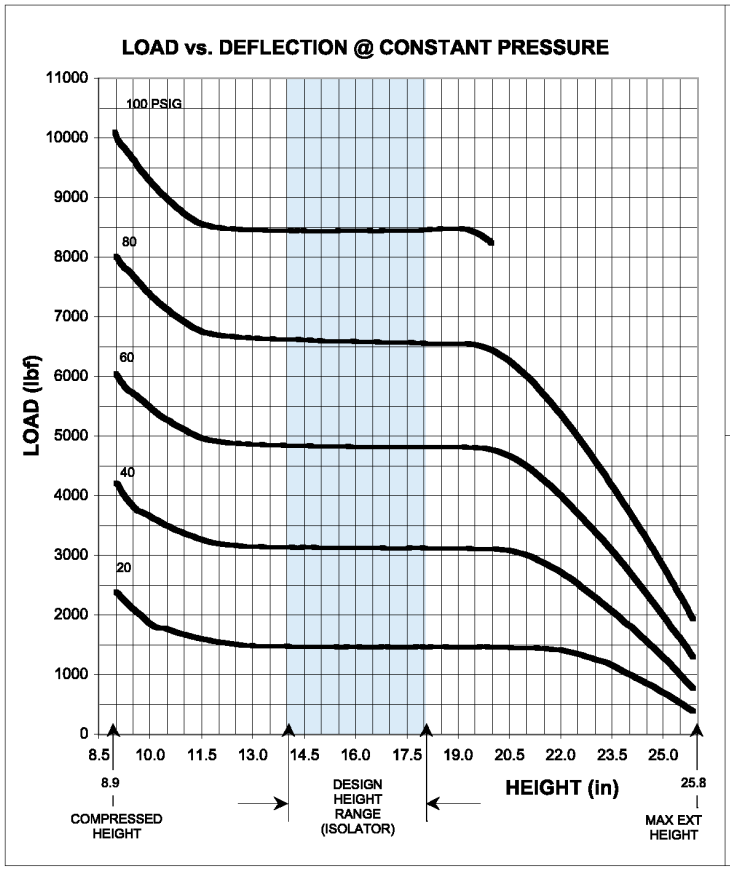

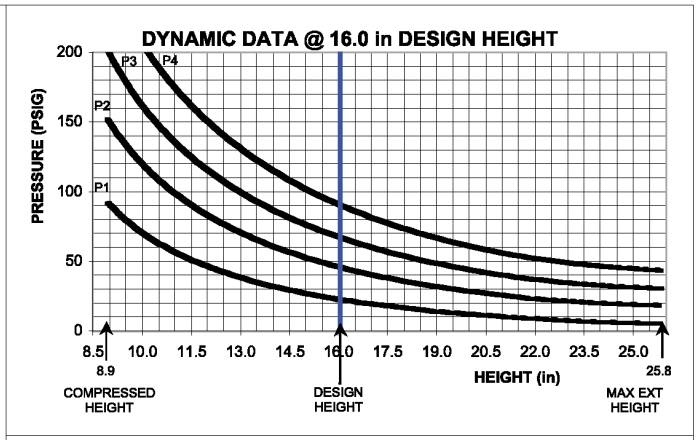

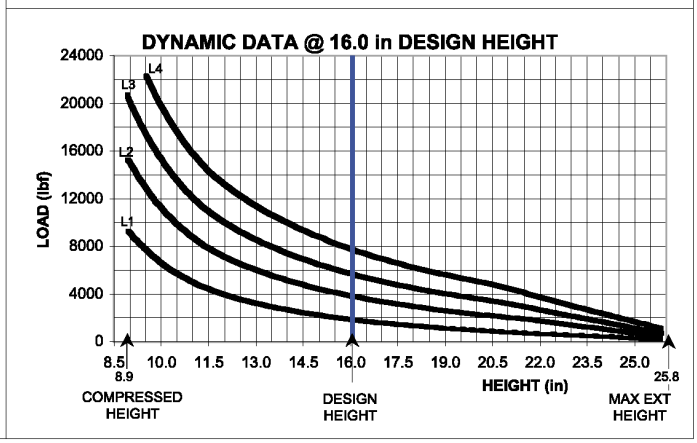

**NOTE: MAXIMUM INFLATION PRESSURE IS 100 PSIG. MAXIMUM JOUNCE PRESSURE IS 200 PSIG. IF YOUR APPLICATION WILL EXCEED THESE LIMITS, CONSULT A GOODYEAR REPRESENTATIVE FOR APPLICATION ASSISTANCE.

CONSTANT PRESSURE CHARACTERISTICS

Assembly Height (in)	Meniscus Height "M" Dim. @ 100 PSIG (in)	Volume @ 100 PSIG (in^3)	Nominal Force (lb)				
			@ 20 PSIG	@ 40 PSIG	@ 60 PSIG	@ 80 PSIG	@ 100 PSIG
25.8	6.9	1980	480	800	1300	2000	--
25.0	6.9	1906	700	1300	2000	2800	--
23.0	6.8	1782	1300	2300	3500	4500	--
21.0	6.7	1619	1400	3000	4500	6000	--
18.0	5.2	1334	1500	3100	4800	6500	8500
16.0	4.1	1152	1500	3100	4800	6500	8500
14.0	3.0	977	1500	3100	4800	6600	8500
12.0	1.8	811	1500	3100	4900	6700	8500
11.0	1.2	731	1700	3400	5000	6900	8900
8.9	0.3	566	2500	4200	6000	8000	10100

DYNAMIC CHARACTERISTICS

Design Height (in)	Load (lb)	Pressure (PSIG)	Spring Rate (lb/in)	Natural Frequency	
				cpm	Hz
18.0	2000	24	300	72	1.20
	4000	47	465	64	1.07
	6000	71	640	61	1.02
	8000	93	810	60	1.00
16.0	2000	24	330	76	1.27
	4000	47	545	69	1.15
	6000	69	720	66	1.10
	8000	92	910	64	1.07
14.0	2000	24	390	83	1.38
	4000	48	660	76	1.27
	6000	71	875	72	1.20
	8000	93	1075	69	1.15