1R12-274

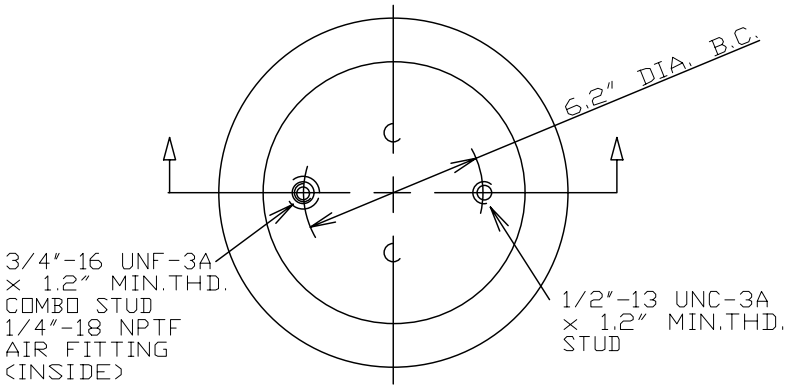

TOP VIEW

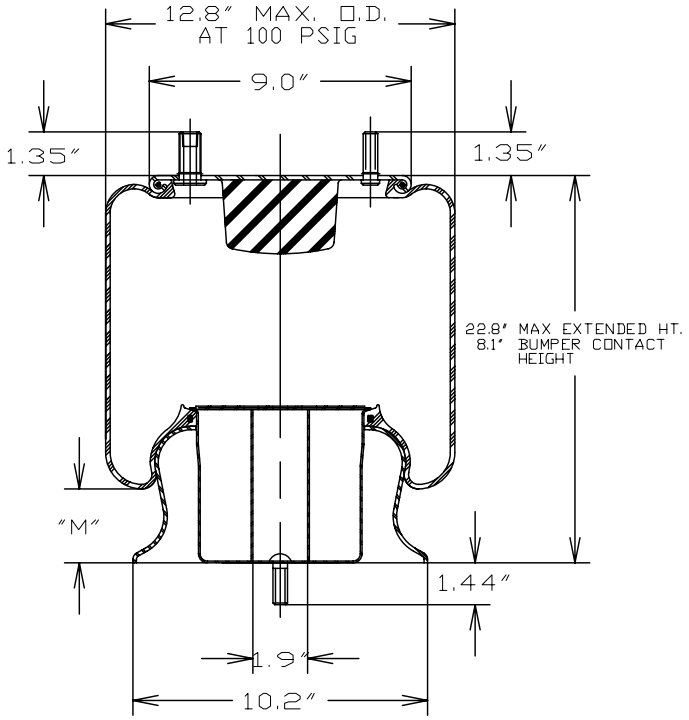

SIDE VIEW

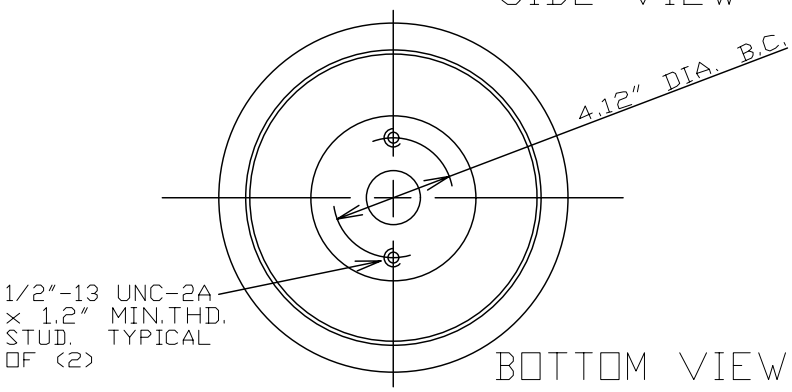

BOTTOM VIEW

ASSEMBLY NUMBER	ELASTOMER	AIR FITTING	BUMPER INCLUDED
1R12-274	NAT.RUBBER	1/4"-18 NPTF COMBO STUD	YES

SPRING FEATURES:

- LOAD RANGE (ISOLATOR).....1450-7300 lb
- DESIGN HEIGHT RANGE (ISOLATOR)....11.3-14.3 in
- USEABLE STROKE (ACTUATOR).....14.7 in
- ASSEMBLY WEIGHT.....20.3 lb
- TEMPERATURE RANGE*.....
- STEEL PISTON

* NOTE: PRODUCT LIFE MAY BE SHORTENED WHEN OPERATING AT OR NEAR EXTREME TEMPERATURES. SEE TEMPERATURE RANGE GUIDELINES SECTION.

OTHER OPTIONS:

- METRIC ATTACHMENTS

UPPER BEAD PLATE:

- ALTERNATE BOLT LENGTHS AND SPACINGS
- ALTERNATE AIR FITTING SIZES AND LOCATIONS
- NO BUMPER OR ALTERNATE BUMPER

PISTON:

- ALUMINUM PISTONS WITH LOWER SPRING RATES

RECOMMENDED MAX. TORQUE VALUES

3/4"-16 UNF COMBO STUD	1/2"-13 UNC TOP STUD	1/2"-13 UNC BOTTOM STUD TYP.OF (2)	1/4"-18 UNC AIR FITTING
600 in-lb 50 ft-lb	300 in-lb 25 ft-lb	300 in-lb 25 ft-lb	240 in-lb 20 ft-lb

NOTE: SEE GUIDELINES FOR PROPER APPLICATION OF THIS PRODUCT

GRAPHS FOR REFERENCE ONLY - USE THE CHART DATA BELOW FOR DESIGN WORK

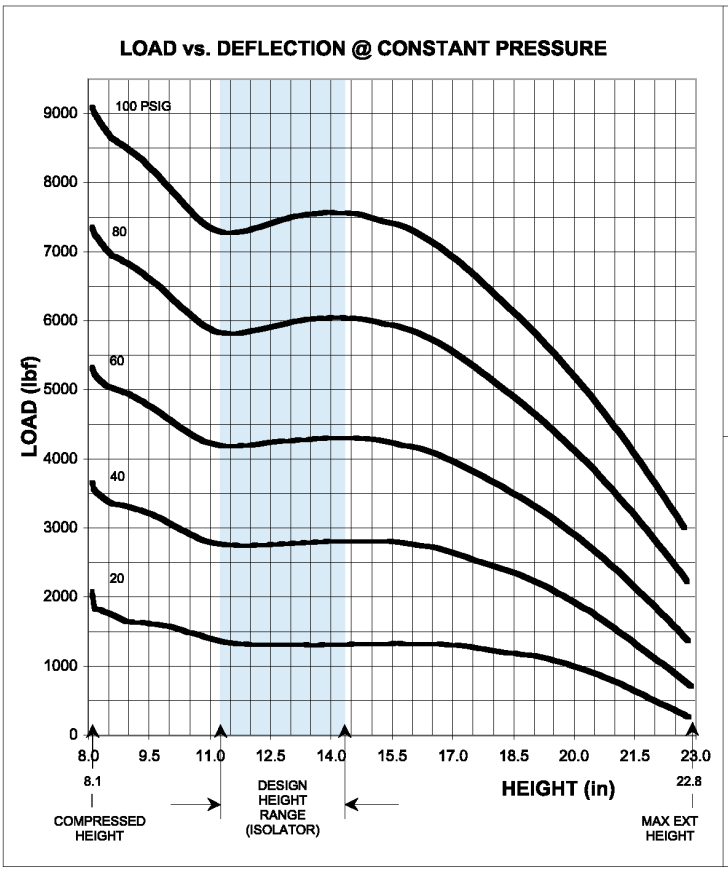

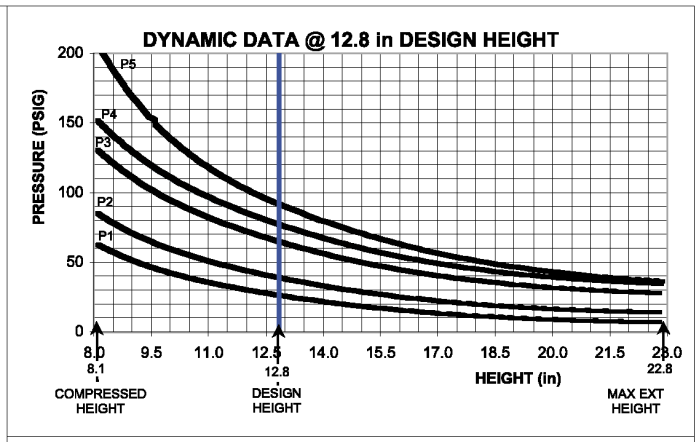

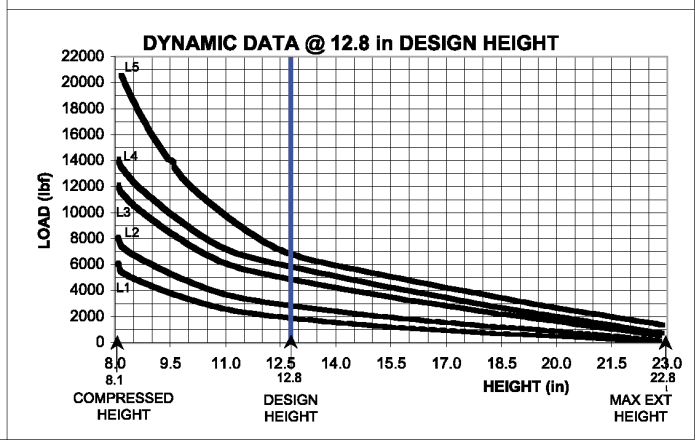

**NOTE: MAXIMUM INFLATION PRESSURE IS 100 PSIG. MAXIMUM JOUNCE PRESSURE IS 200 PSIG. IF YOUR APPLICATION WILL EXCEED THESE LIMITS, CONSULT A GOODYEAR REPRESENTATIVE FOR APPLICATION ASSISTANCE.

CONSTANT PRESSURE CHARACTERISTICS

Assembly Height (in)	Meniscus Height "M" Dim. @ 100 PSIG (in)	Volume @ 100 PSIG (in^3)	Nominal Force (lb)				
			@ 20 PSIG	@ 40 PSIG	@ 60 PSIG	@ 80 PSIG	@ 100 PSIG
22.8	4.8	1717	300	750	1450	2200	3000
22.0	4.8	1684	500	1150	1900	2900	3700
20.0	4.7	1574	1050	2000	2900	4200	5200
18.0	4.1	1419	1250	2500	3600	5100	6400
16.0	3.5	1248	1450	2700	4100	5800	7300
14.3	2.9	1111	1450	2800	4300	6000	7500
12.8	2.0	969	1400	2800	4200	6000	7500
11.3	1.0	864	1400	2700	4100	5800	7300
10.0	0.4	756	1600	2900	4500	6400	8000
8.1	0.0	630	1700	3500	5200	7200	9000

DYNAMIC CHARACTERISTICS

Design Height (in)	Load (lb)	Pressure (PSIG)	Spring Rate (lb/in)	Natural Frequency	
				cpm	Hz
14.3	2000	26	315	75	1.25
	3000	39	420	71	1.18
	5000	65	635	67	1.12
	6000	78	725	66	1.10
	7000	90	850	65	1.08
12.8	2000	27	315	74	1.23
	3000	40	405	69	1.15
	5000	67	565	63	1.05
	6000	79	640	61	1.02
	7000	92	700	59	0.98
11.3	2000	28	395	83	1.38
	3000	41	485	75	1.25
	5000	69	725	71	1.18
	6000	82	805	69	1.15
	7000	94	880	67	1.12